PAGE	

BY	CHK	REVISION RECORD MODIFICATIONS	DATE	REV.
ALLEN		RELEASE TO PRODUCTION	2008,7,28	1.0

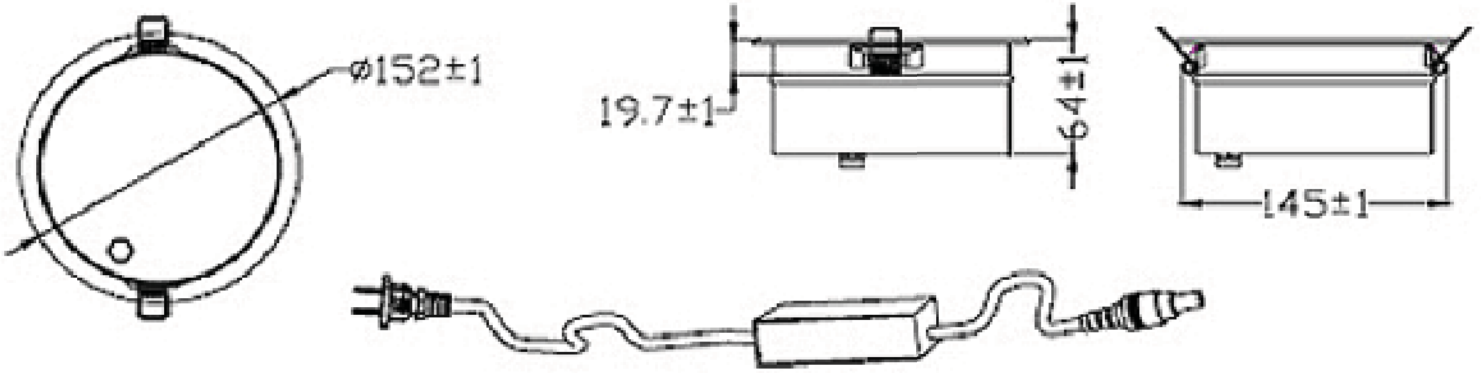

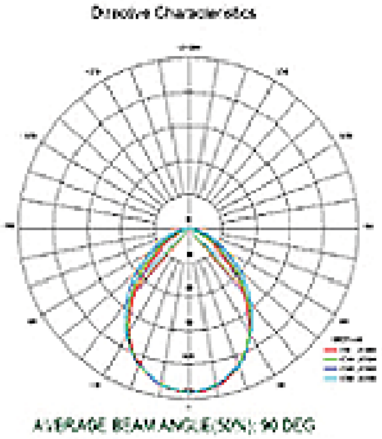

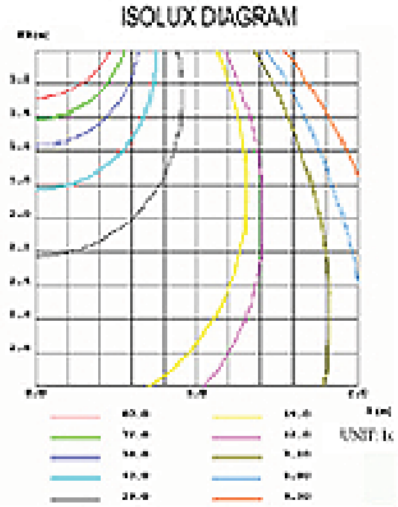

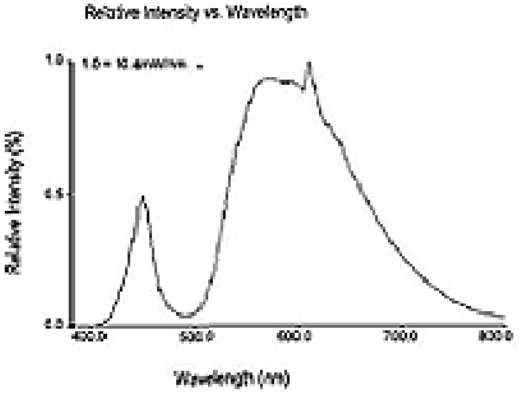

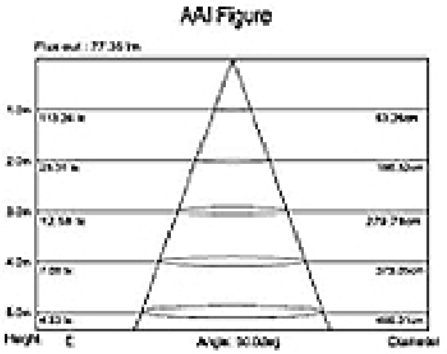

APPRO	CHECK	DRAWN	PART NO.				DESCRIPTION	VIGORTEC
			ITEM NO.					
			DRAW NO.					
			UNIT		SCALE	no		
			TOLER		NO.		Tel:0769 2202 0068 Fax:0769 2202 0069 E-mail:sales@vigortec.com	